NOVA LUCE

9030944

1

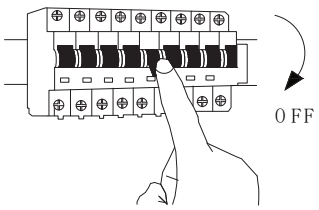

Turn off the general switch

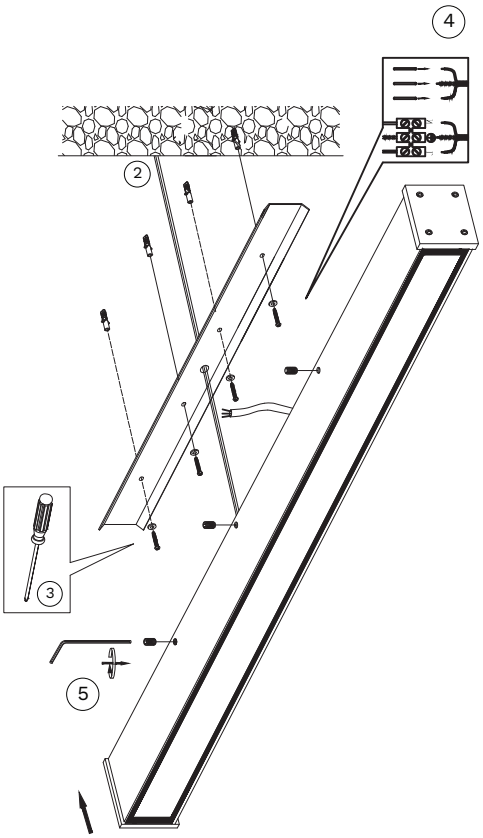

6

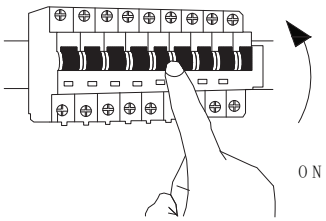

Turn on the general switch

1. Turn off general switch
2. Drill holes & apply plastic anchors
3. Make it stable by tying up screws
4. Connect the wires
5. Make it stable by tying up side screws
6. Turn on the general switch